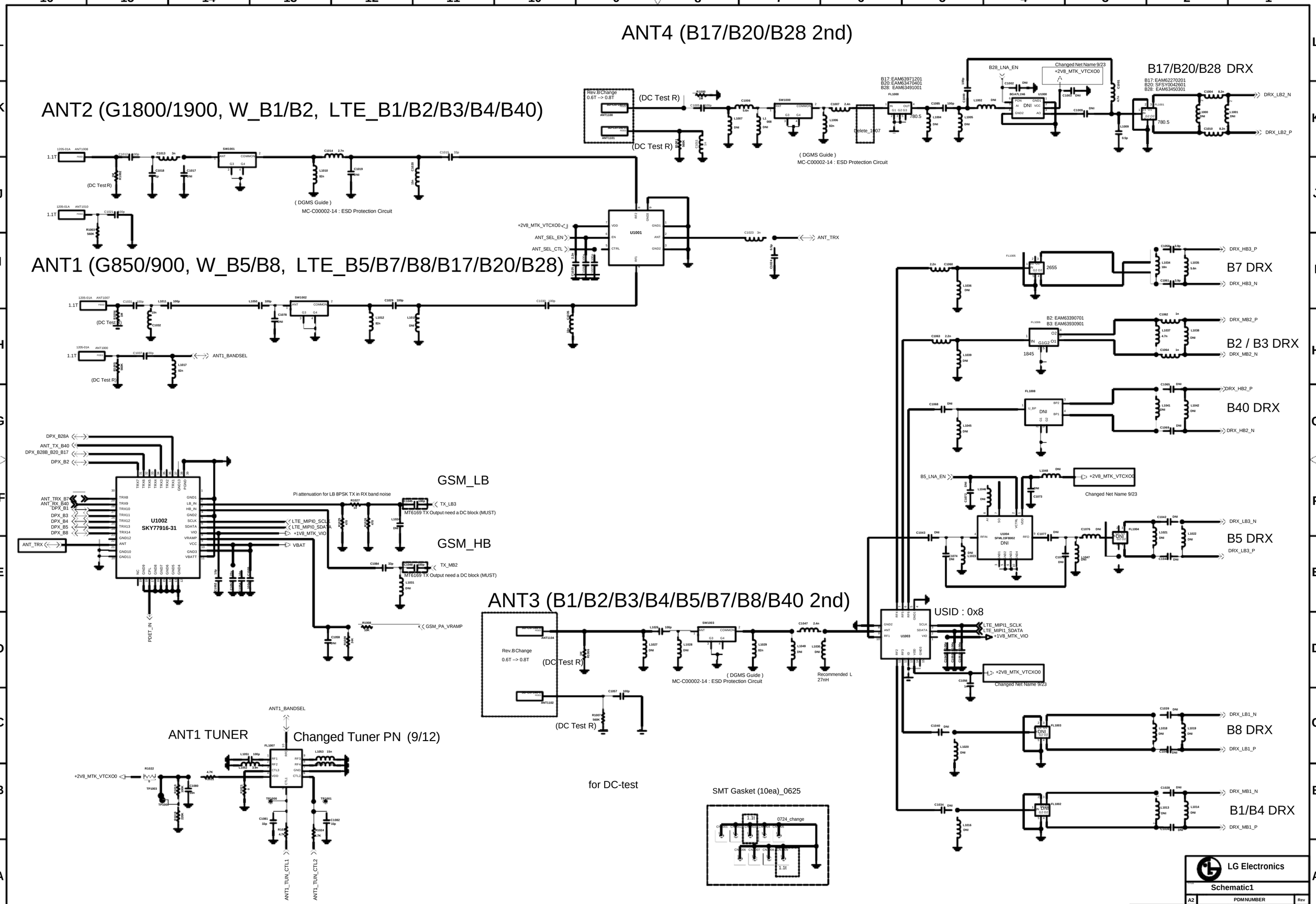

ANT4 (B17/B20/B28 2nd)
B17/B20/B28 DRX
ANT2 (G1800/1900, W_B1/B2, LTE_B1/B2/B3/B4/B40)
ANT1 (G850/900, W_B5/B8, LTE_B5/B7/B8/B17/B20/B28)
GSM_LB
GSM_HB
ANT3 (B1/B2/B3/B4/B5/B7/B8/B40 2nd)
USID : 0x8
B7 DRX
B2 / B3 DRX
B40 DRX
B5 DRX
B8 DRX
B1/B4 DRX
ANT1 TUNER
Changed Tuner PN (9/12)
for DC-test
SMT Gasket (10ea)_0625
U1002
SKY77916-31
U1001
U1003
U1004
SFML15F8002
DNI
(DGMS Guide)
MC-C00002-14 : ESD Protection Circuit
Changed Net Name 9/23
+2V8_MTK_VTCXO0
Rev.B Change
0.6T --> 0.8T
(DC Test R)
ANT_TRX
ANT_SEL_EN
ANT_SEL_CTL
ANT1_BANDSEL
DPX_B28A
ANT_TX_B40
DPX_B28B_B20_B17
DPX_B2
ANT_TRX_B7
ANT_RX_B40
DPX_B3
DPX_B4
DPX_B5
DPX_B8
PDET_IN
LTE_MIPI0_SCLK
LTE_MIPI0_SDATA
+1V8_MTK_VIO
VBAT
TX_LB3
TX_MB2
MT6169 TX Output need a DC block (MUST)
GSM_PA_VRAMP
DRX_LB2_N
DRX_LB2_P
DRX_HB3_P
DRX_HB3_N
DRX_MB2_P
DRX_MB2_N
DRX_HB2_P
DRX_HB2_N
DRX_LB3_N
DRX_LB3_P
DRX_LB1_N
DRX_LB1_P
DRX_MB1_N
DRX_MB1_P
B28_LNA_EN
B5_LNA_EN
LTE_MIPI1_SCLK
LTE_MIPI1_SDATA
ANT1_TUN_CTL1
ANT1_TUN_CTL2
LG Electronics
Schematic1
A2
PDMNUMBER
Rev
User Name
Drawing Date

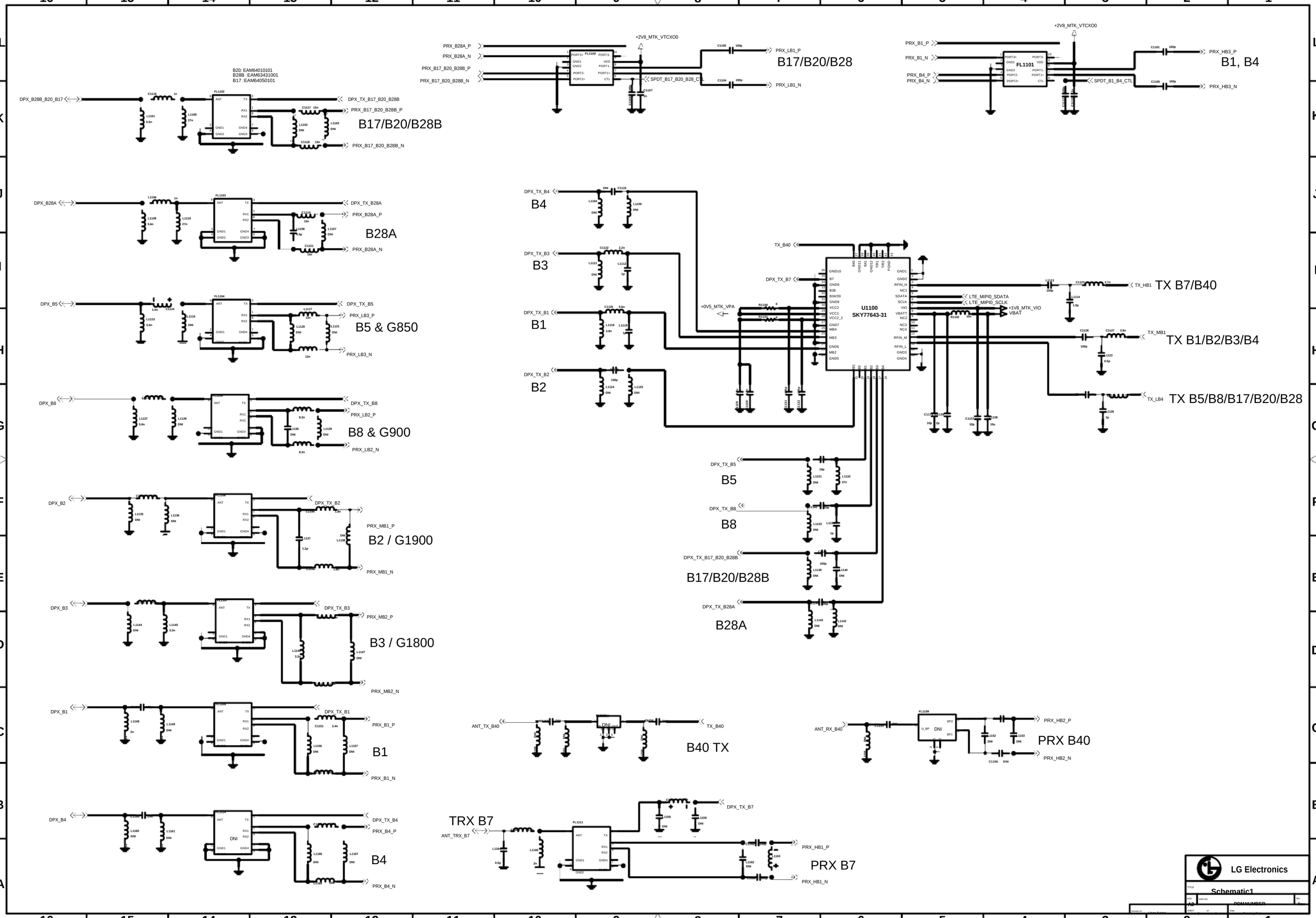
B20: EAM64010101
B28B :EAM63431001
B17 :EAM64050101
B17/B20/B28B
B17/B20/B28
B1, B4
B28A
B5 & G850
B8 & G900
B2 / G1900
B3 / G1800
B1
B4
B4
B3
B1
B2
B5
B8
B17/B20/B28B
B28A
TX B7/B40
TX B1/B2/B3/B4
TX B5/B8/B17/B20/B28
U1100
SKY77643-31
B40 TX
PRX B40
TRX B7
PRX B7
LG Electronics
Schematic1
A3
DPMNUMBER

<1-9-5-1_RFIC_MT6169>

Rev_0.4

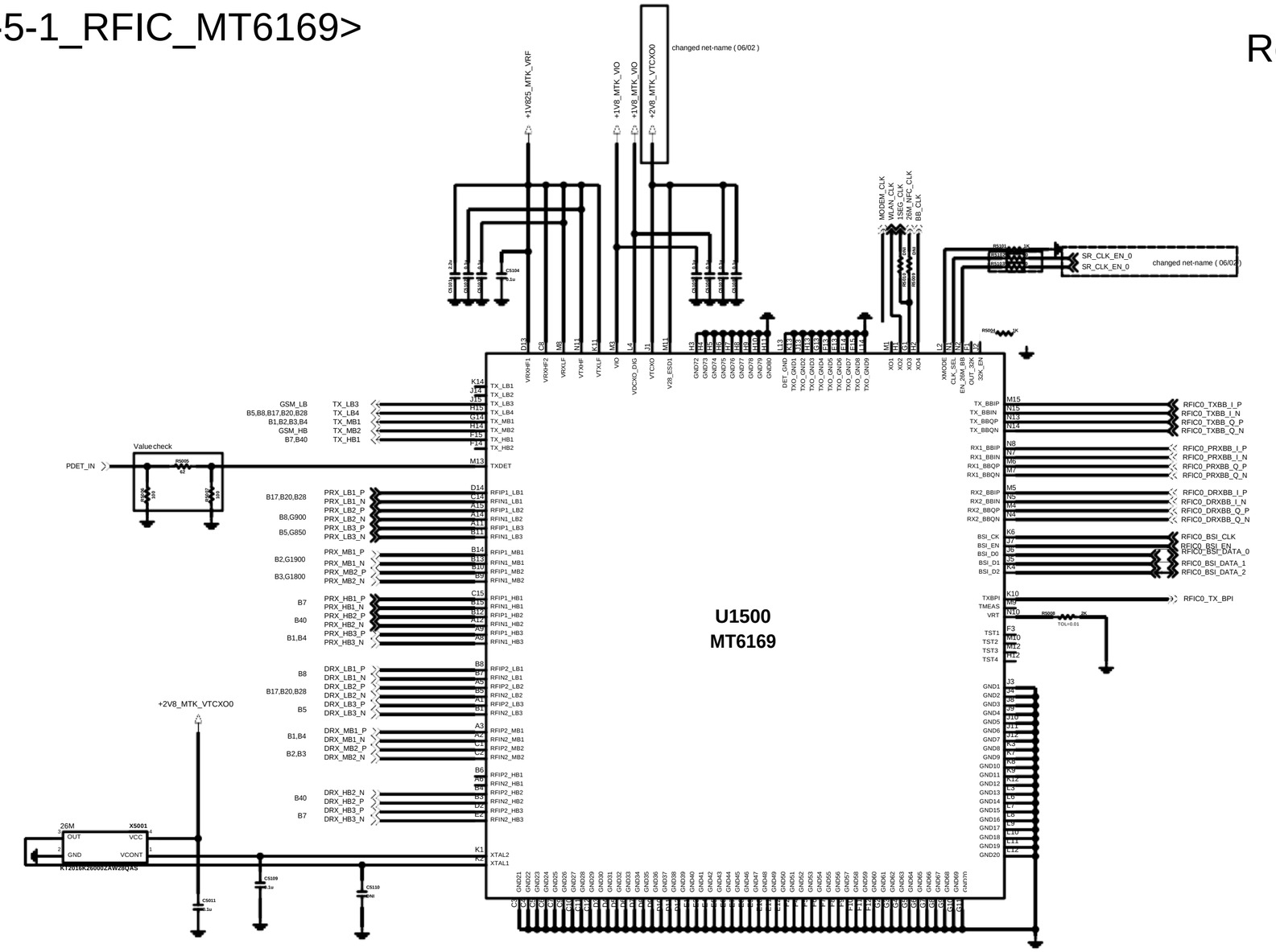

LG Electronics

MODEL NAME

A2 | PDM NUMBER | Rev

1 WTR1605L 20

User Name | Drawing Date

<MT6753 Data>

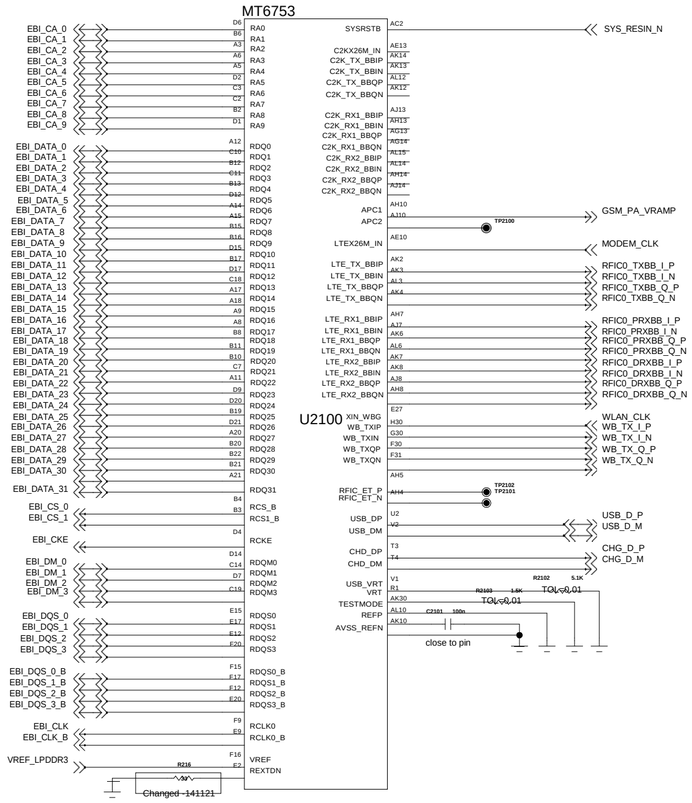

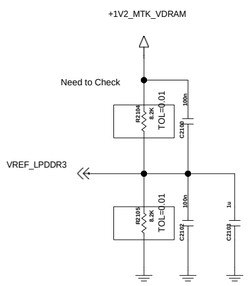

PCB REVISION_GPIO

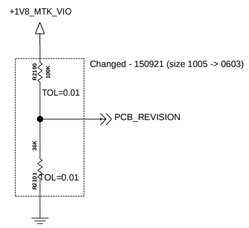

Revision	R2100	R2101	Level
A	100K	20K	0.300
B	100K	27K	0.383
C	DNI	100K	0.000
D	100K	51K	0.680
1.0	100K	36K	0.476
1.1	100K	DNI	1.8

LG Electronics

TITLE: Schematic1

SIZE: A2 | DWG NO: PDMNUMBER | REV: Rev

SHEET: 2-1-1_MSM8974_DATA | Drawing Date:

Drawn by: User Name

< MT6753_GPIO >

PCB Indicator

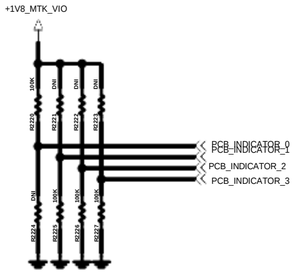

Model Indicator

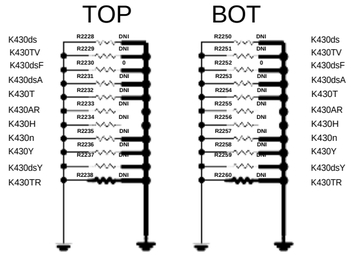

Model	Band	NFC	SIM	GPIO_102	GPIO_101	GPIO_100	GPIO_99	SUM
K430ds	3/7/20	X	Dual	L	L	L	L	0
<----------MMPA		REV.B------	---------->	L	H	H	L	6
K430TV	3/7/28	X	Dual	L	H	L	H	5
<----------MMPA		REV.B------	---------->	L	H	H	H	7
K430dsF	3/7/28	X	Dual	L	L	L	H	1
K430dsA	3/7/28	X	Dual	L	L	H	H	3
K430T	2/4/5/7/28	X	SINGLE	H	H	H	H	15
K430AR	4/28	X	SINGLE	H	L	L	H	9
K430H	2/4/5/7/17	X	SINGLE	H	L	H	H	11
K430n	1/3/7/8/40	O	SINGLE	H	H	H	L	14
K430Y	1/3/5/7/8	X	SINGLE	H	L	H	L	10
K430dsY	1/3/5/7/8/28/40	X	Dual	L	L	H	L	2
K430TR	1/3/7/8/20	X	SINGLE	H	L	L	L	8

Indicator_3 : Dual SIM/Single SIM
Indicator_2 : 1Seg/NFC/etc
Indicator_1 : Band(3G_B4)/40(TDD)/Memory(1G/8G)
Indicator_0 : A0¿ª
Indicator_2&1 : MMPA REVISION ±¸°Ð

< 9-3-1_JTAG > Rev_0.4

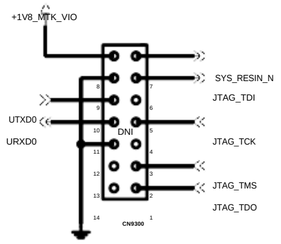

MT6753

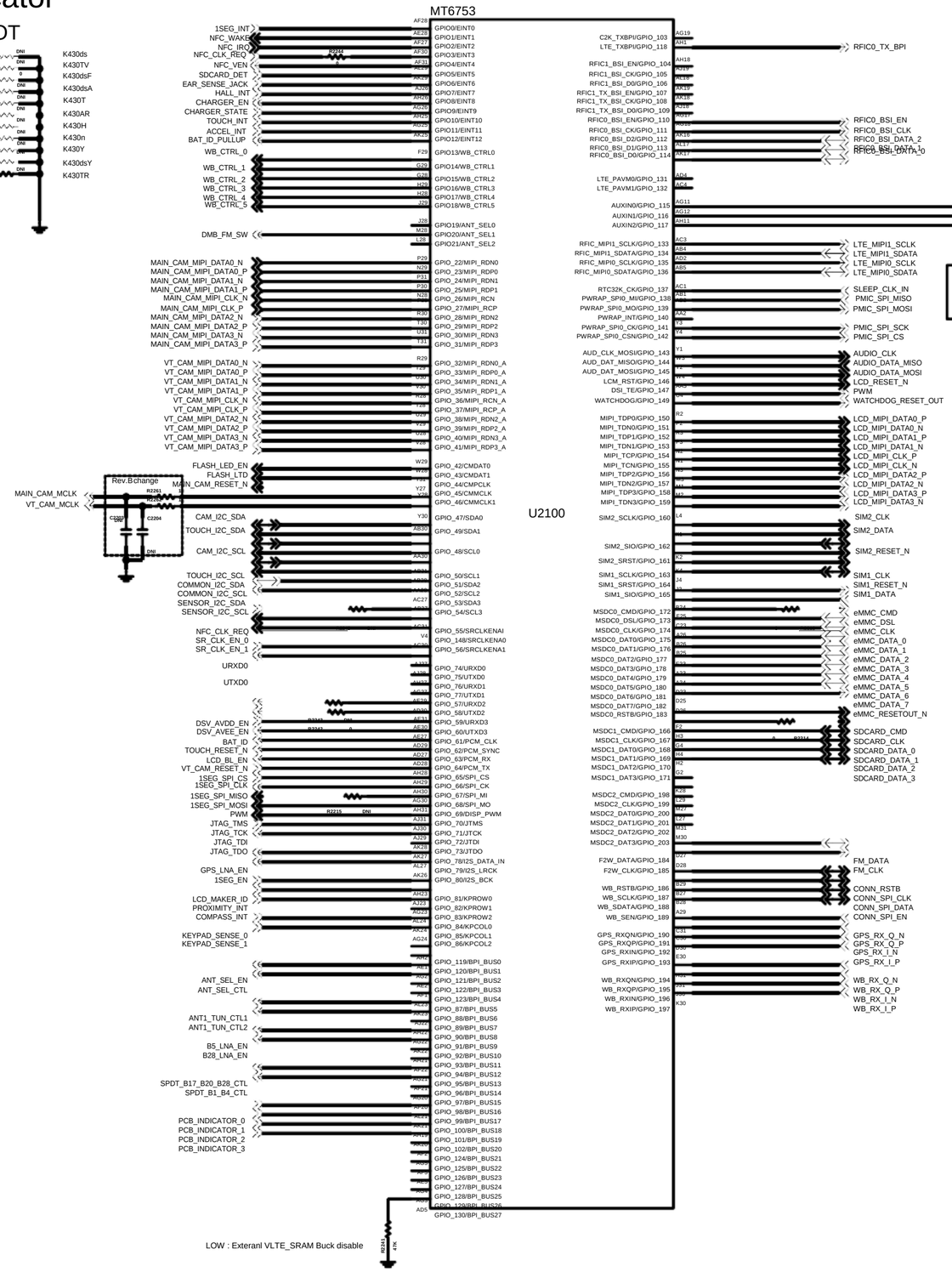

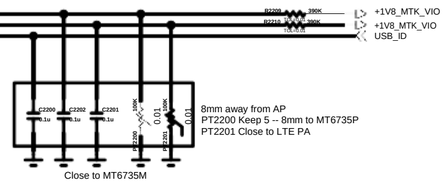

I2C Pull-Up

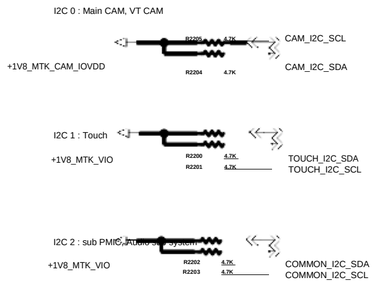

LG Electronics

Schematic1

A2 | PDMNUMBER | Rev

User Name | 2-2_MT6735BP_GPIO | Drawing Date

<MT6753_POWER >

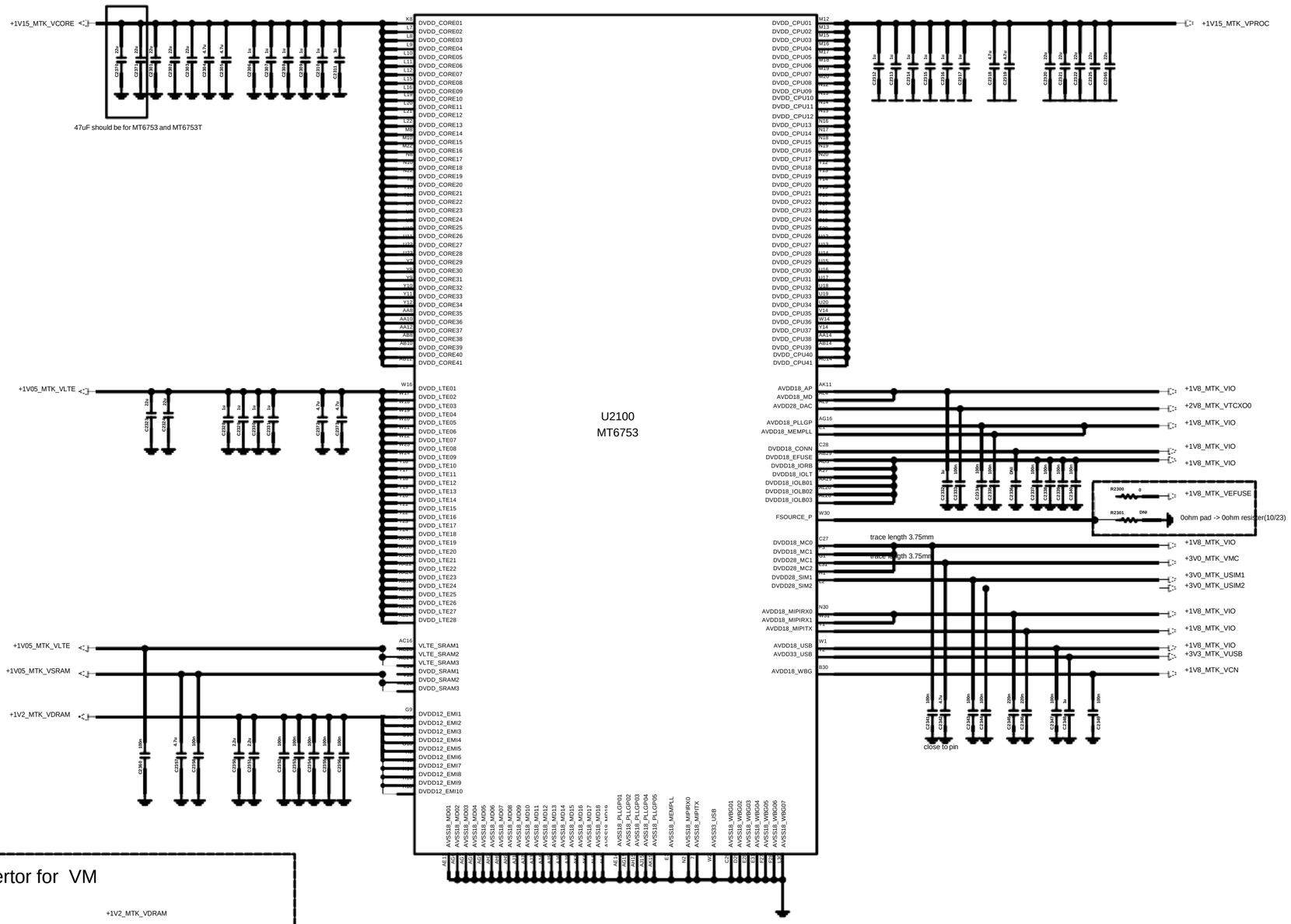

External Buck convertor for VM

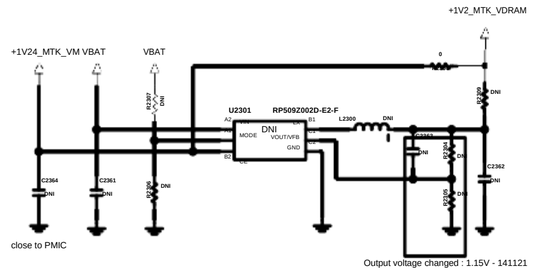

LG Electronics

MODEL NAME

A2 | PDMNUMBER | Rev

DRAWN BY User Name | SHEET 1 2-1-1_MSM8974_DATA | Date Drawing Date

< MT6753_GND >

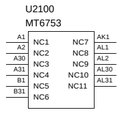

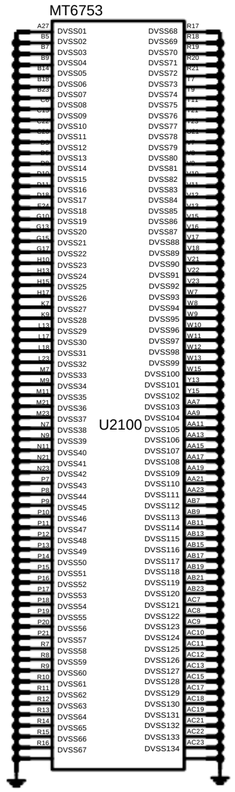

LG Electronics

TITLE Schematic1

SIZE DWG NO REV

A2 PDMNUMBER Rev

SHEET of Date

DRAWN BY

< 3-3-3_MCP_eMMC_5_0_1.5G_DDR3_16G_eMMC Samsung > Rev_0.3

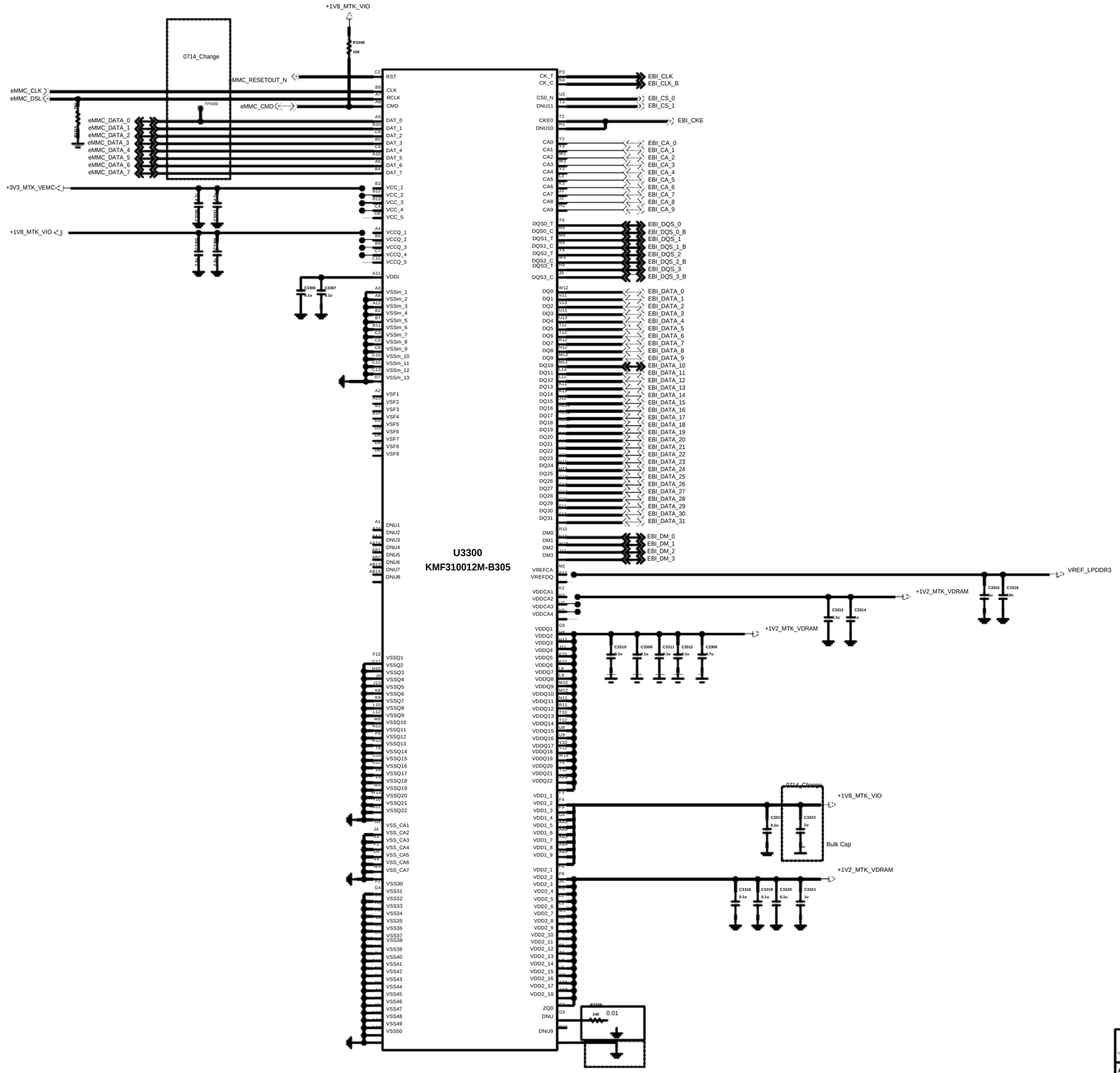

< MT6328_DATA >

BACKUP BATTERY

Changed - 150921 (size 1005 -> 0603)

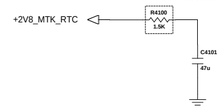

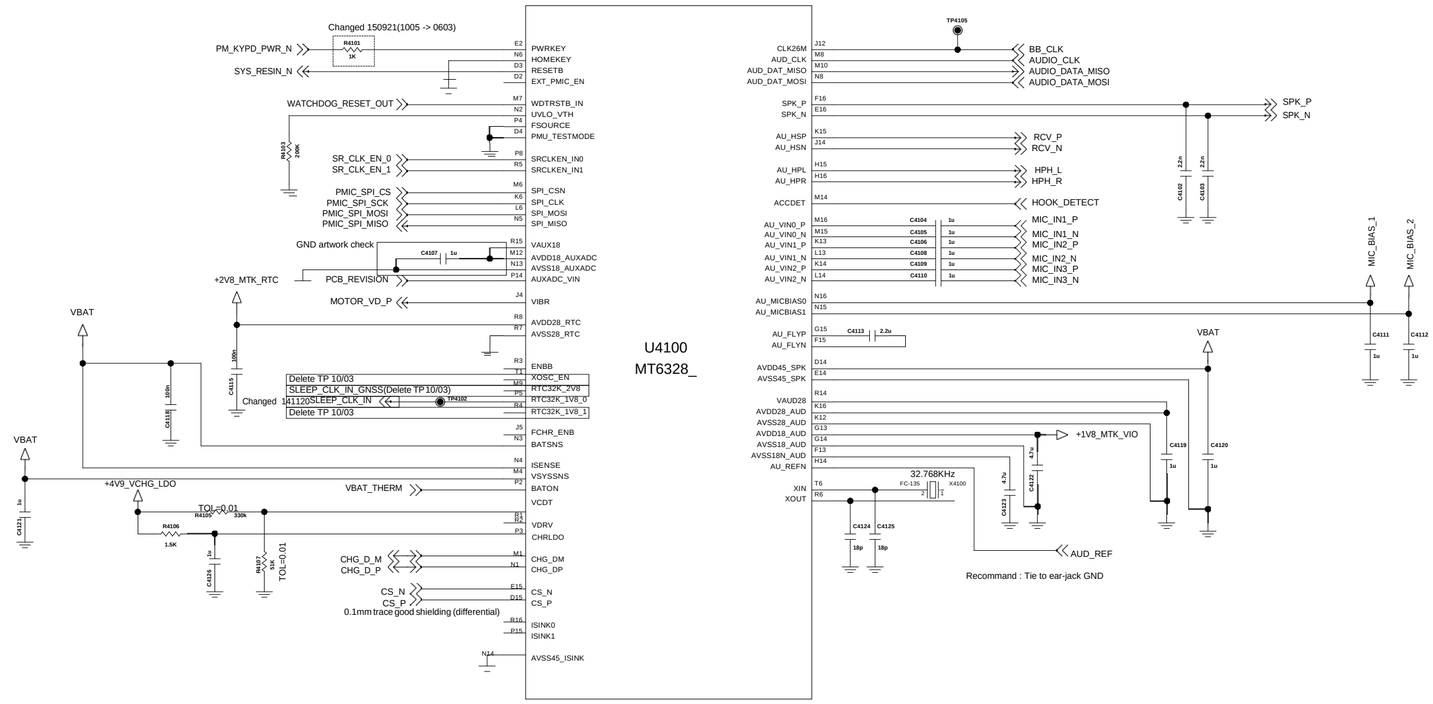

LG Electronics

TITLE: Schematic1

SIZE	DWG NO	REV
A2	PDM NUMBER	Rev

DRAWN BY: User Name | SHEET 1 OF 1 | Date: Drawing Date

4711_PMIC_PM8226

< MT6328_POWER >

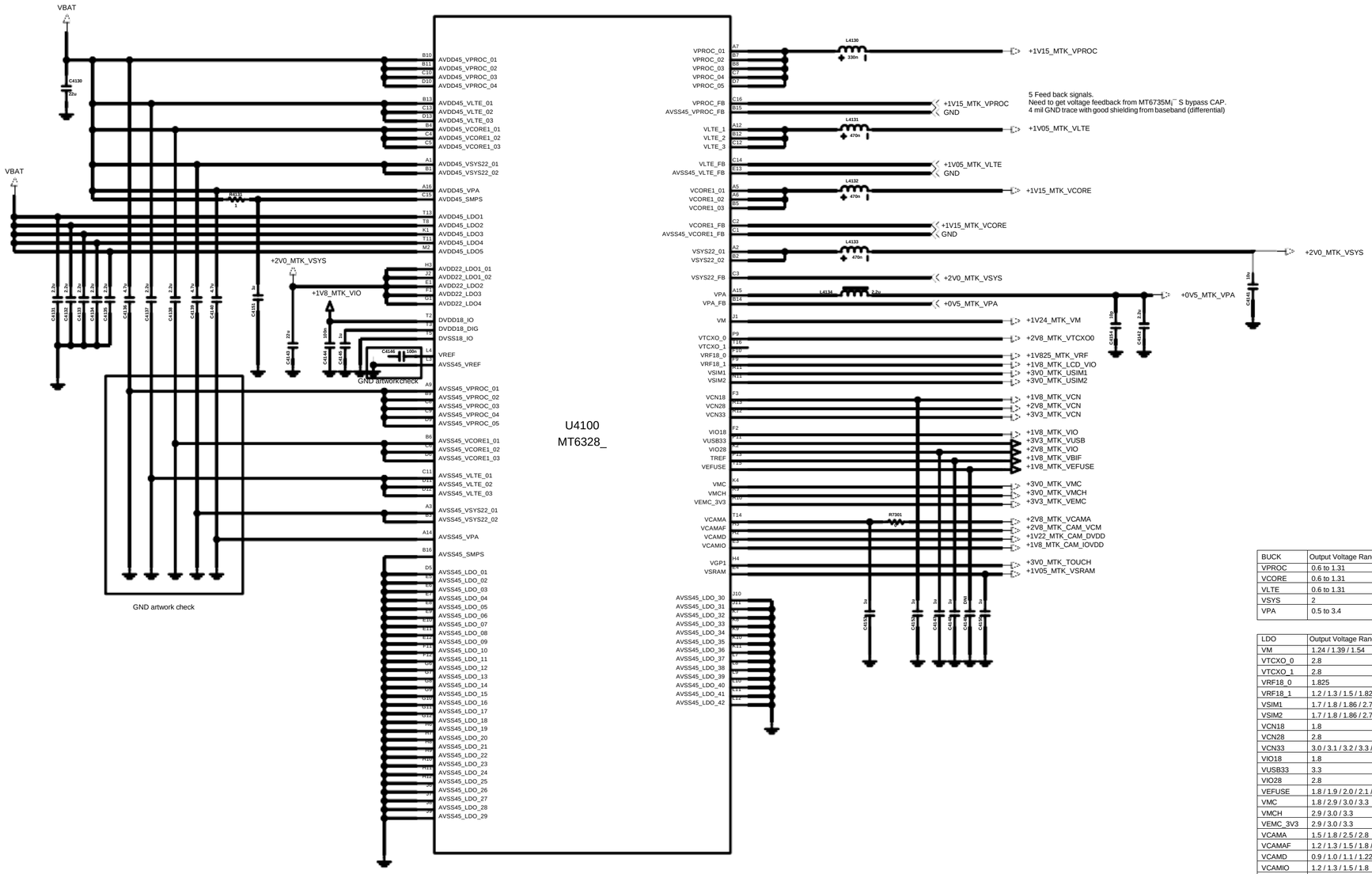

BUCK	Output Voltage Range(V)	Output Current(mA)
VPROC	0.6 to 1.31	5000
VCORE	0.6 to 1.31	3500
VLTE	0.6 to 1.31	2800
VSYS	2	1900
VPA	0.5 to 3.4	600

LDO	Output Voltage Range(V)	Output Current(mA)
VM	1.24 / 1.39 / 1.54	1000
VTCXO_0	2.8	40
VTCXO_1	2.8	40
VRF18_0	1.825	350
VRF18_1	1.2 / 1.3 / 1.5 / 1.825	300
VSIM1	1.7 / 1.8 / 1.86 / 2.76 / 3.0 / 3.1	50
VSIM2	1.7 / 1.8 / 1.86 / 2.76 / 3.0 / 3.1	50
VCN18	1.8	150
VCN28	2.8	40
VCN33	3.0 / 3.1 / 3.2 / 3.3 / 3.4 / 3.5 / 3.6	350
VIO18	1.8	600
VUSB33	3.3	20
VIO28	2.8	200
VEFUSE	1.8 / 1.9 / 2.0 / 2.1 / 2.2	200
VMC	1.8 / 2.9 / 3.0 / 3.3	200
VMCH	2.9 / 3.0 / 3.3	800
VEMC_3V3	2.9 / 3.0 / 3.3	400
VCAMA	1.5 / 1.8 / 2.5 / 2.8	200
VCAMAF	1.2 / 1.3 / 1.5 / 1.8 / 2.0 / 2.8 / 3.0 / 3.3	200
VCAMD	0.9 / 1.0 / 1.1 / 1.22 / 1.3 / 1.5	500
VCAMIO	1.2 / 1.3 / 1.5 / 1.8	200
VGP1	1.2 / 1.3 / 1.5 / 1.8 / 2.5 / 2.8 / 3.0 / 3.3	200
VSRAM	0.6 to 1.31	400
VIBR	1.2 / 1.3 / 1.5 / 1.8 / 2.0 / 2.8 / 3.0 / 3.3	100
VAUX18	1.8	40
VAUD28	2.8	40
DVDD18_DIG	1.8	20
VRTC	2.8	2

LG Electronics

MSM8926_B2_mini

Size	Document Number	Rev
A2	PDMNUMBER	

User Name

4-1-3-2_PMIC_PM8926_POWER

Wednesday, July 09, 2014

<5-1-1-18_MT6625L_WiFi_BT_GPS_FM> Rev_0.3

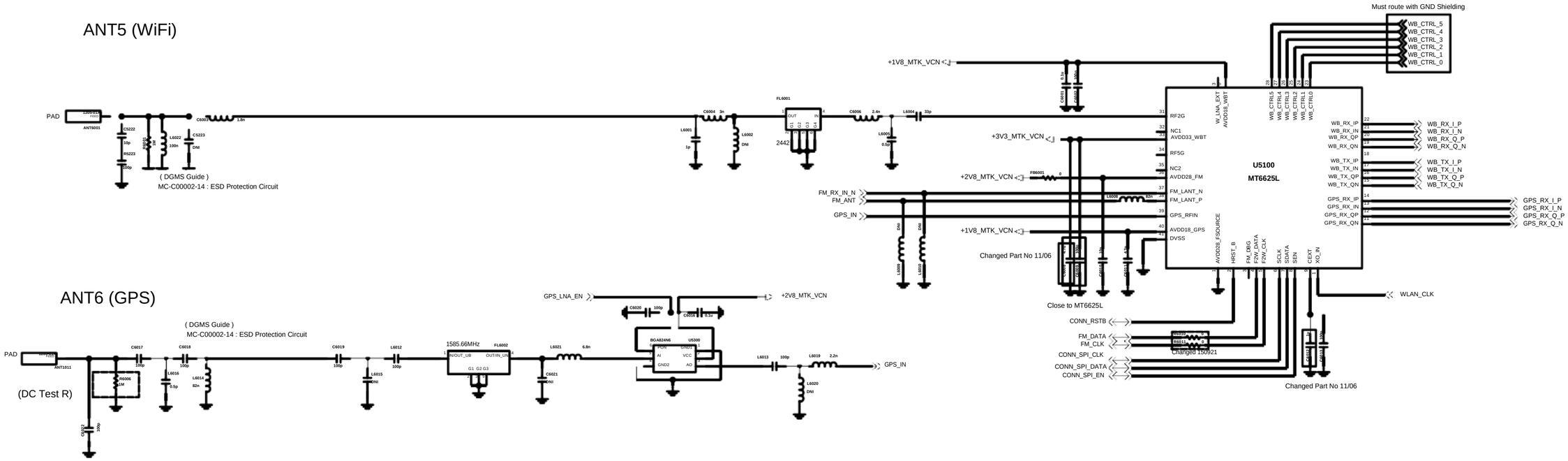

<5-2-1-8_BCM20795F> Rev_1.0

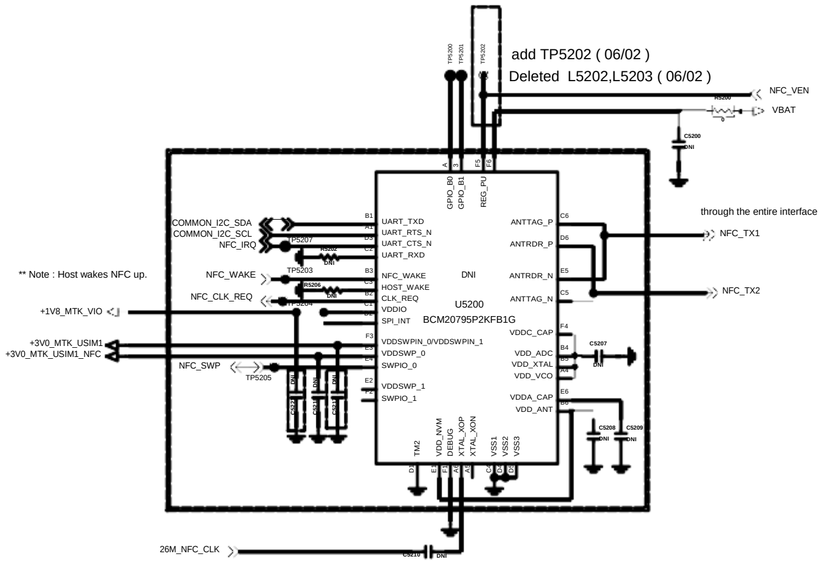

NFC Antenna

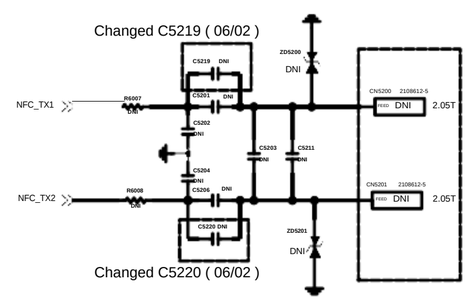

LG Electronics

Schematic1

A2 | PDMNUMBER | Rev

User Name | 8 | 8 | Drawing Date

<Only for LATAM>

<5-3-1-6_One_SEG_FC8180> Rev_1.0

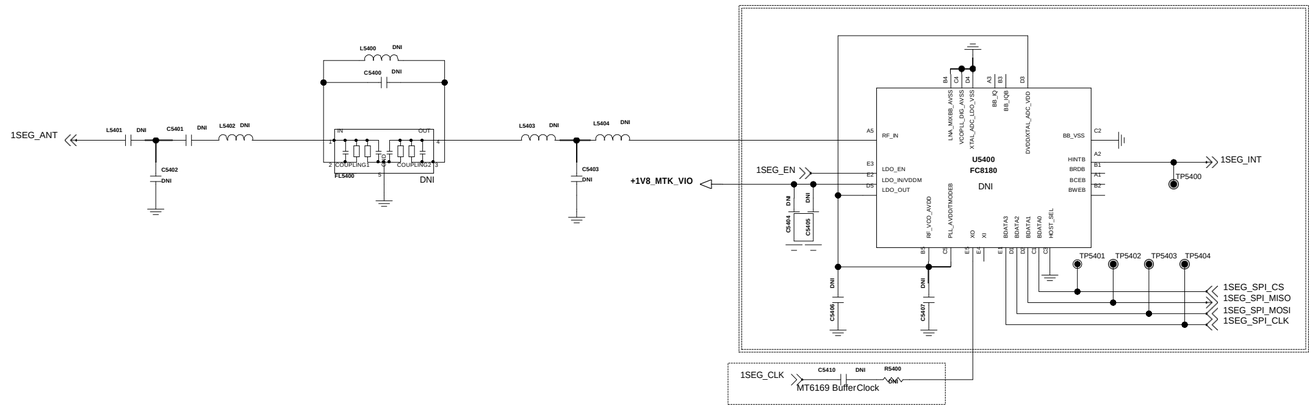

CIS_DNI

LG Electronics	
TITLE Schematic1	
SIZE A2	DWG NO PDMNUMBER
REV Rev	
SHEET	
DRAWN BY User Name	DATE
5-3-1-6_One_SEG_FC8180 Drawing Date	

<4-4-3_LCD_Backlight_IC_RT8542> Rev_1.2

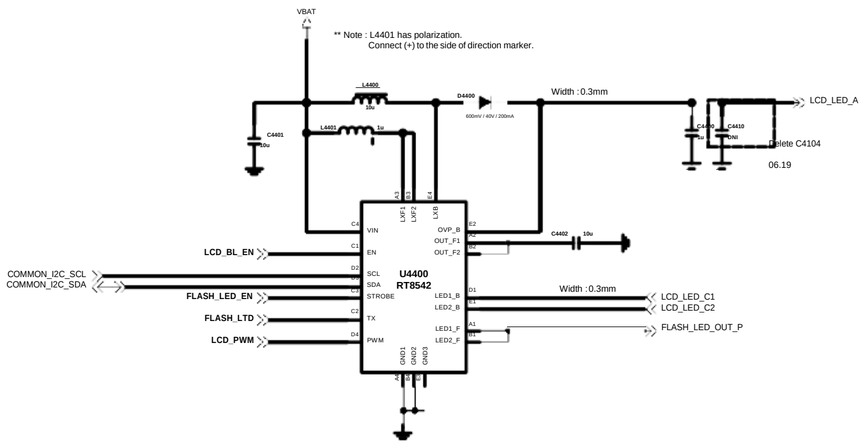

< Camera Flash LED >

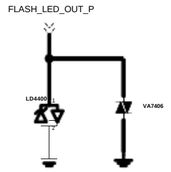

ZD9830 : Clamping 12.3V / 65pF / 150mW

<DSV_SM5107>

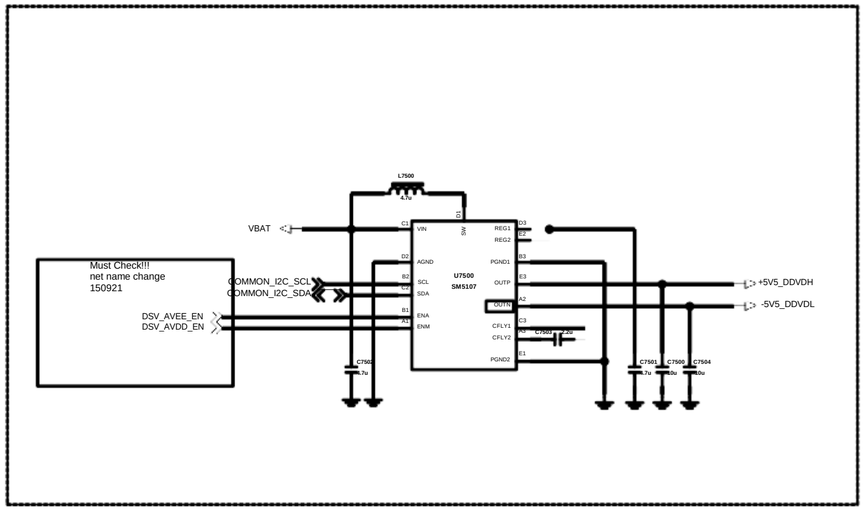

5.3" Incell LCD Connector

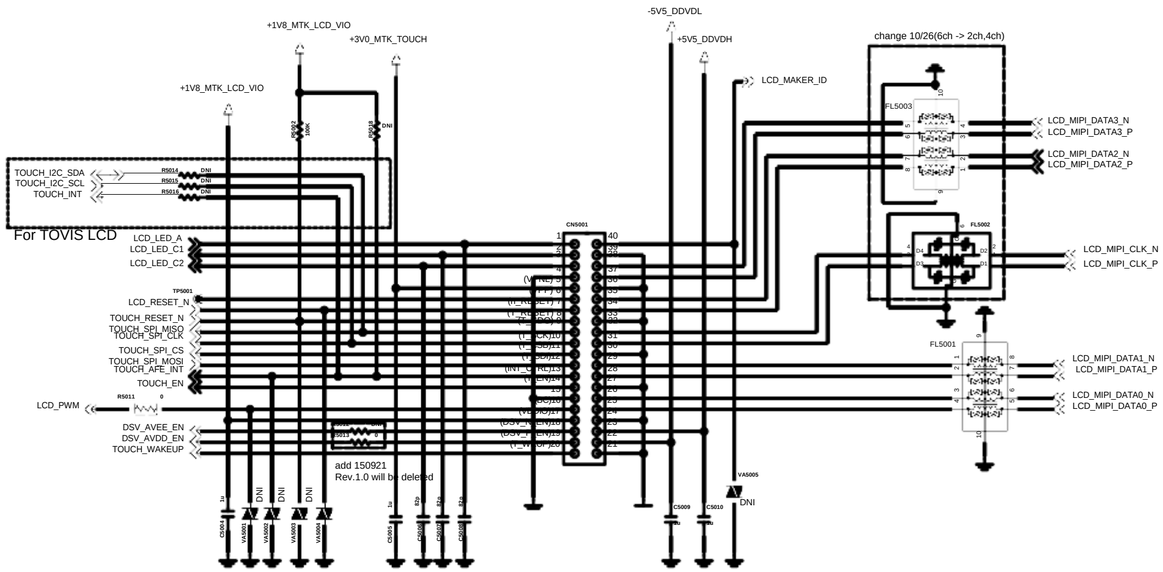

TOUCH IC

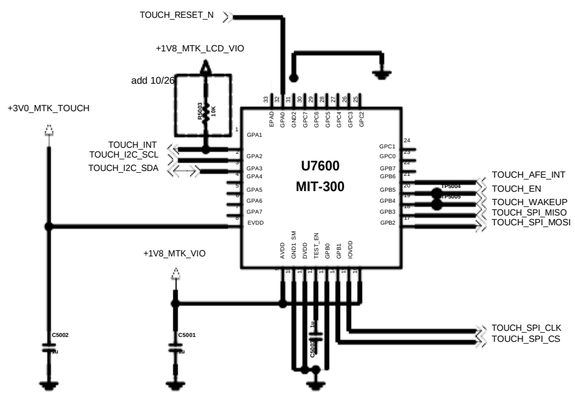

LG Electronics

Schematic1

A2	PDMNUMBER	Rev
User Name	23 23	Drawing Date

< 7-3_Main_Camera > Rev_1.2

Camera 5. 30pin 8M & 13 AF

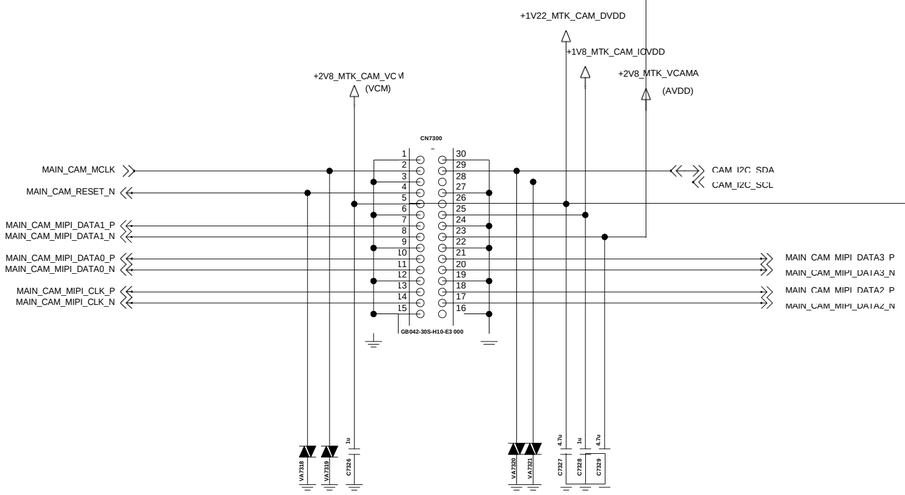

<VT Camera>

Option 5M/8M Change Pin Map(30Pin)

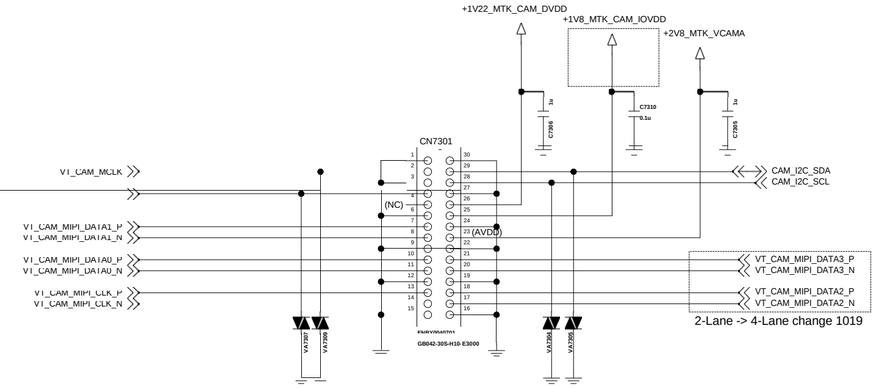

LG Electronics		
TITLE: Schematic1		
SIZE: A2	DWG NO: PDMNUMBER	REV: Rev
DRAWN BY: User Name	SHEET 24 of 24	Date: Drawing Date

< 6-7-1_Speaker > Rev_1.2

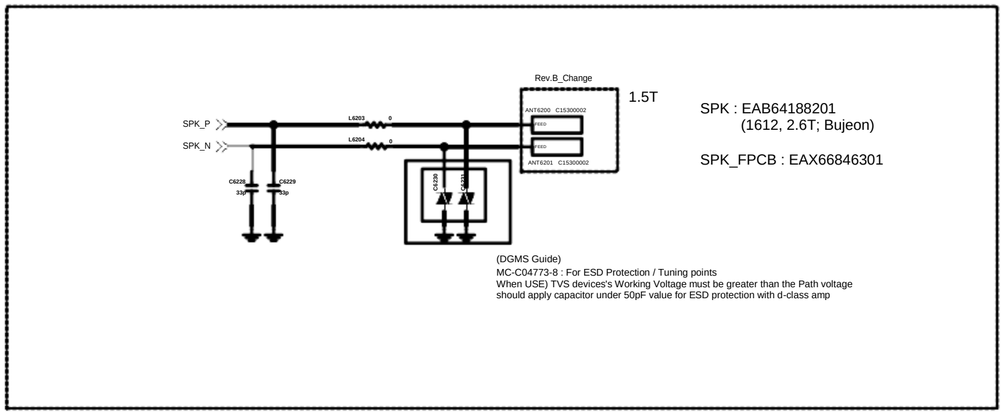

SPK : EAB64188201
(1612, 2.6T; Bujeon)

SPK_FPCB : EAX66846301

< 6-6-1_Earjack >

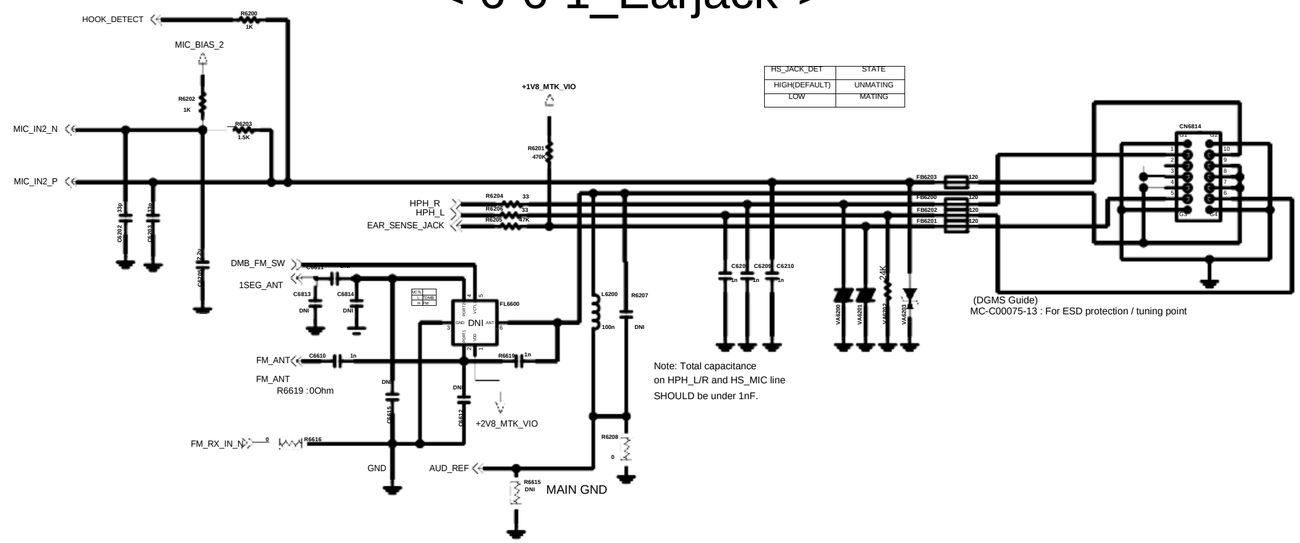

HS_JACK_DET	STATE
HIGH(DEFAULT)	UNMATING
LOW	MATING

< 6-9-1_MIC > Rev_1.0

MAIN_MIC

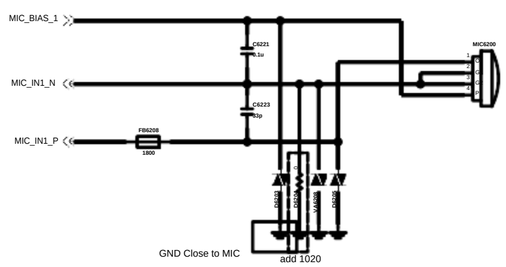

SUB_MIC

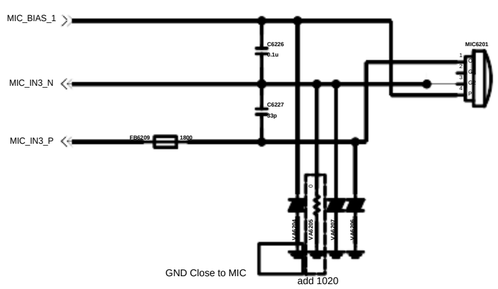

< 6-8-1_Receiver > Rev_1.1

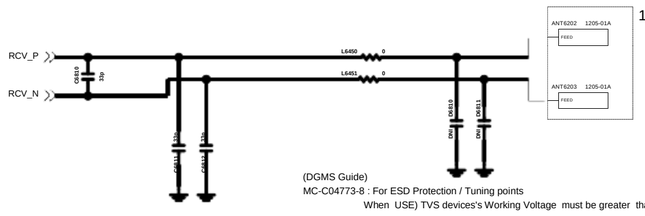

RCV : EAB63668201
(BSE; FPCB type)

LG Electronics

MSM8926_X5_GLOBAL

A2 | PDMNUMBER | Rev

Sensor 5

User Name

Drawing Date

<8-1-2-1_Accel_Compass_BMC150> Rev_1.0

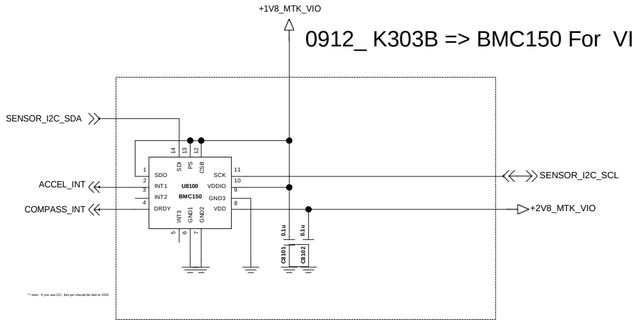

<Proximity_PAS230I1_Partron_2.7T>

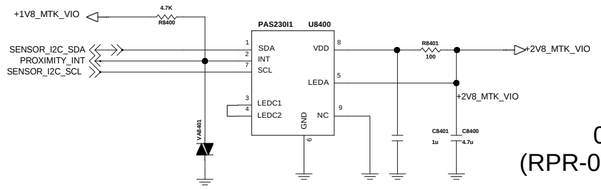

0711_Change
(RPR-0521-->PAS230I1)

<8-7-1-6_Hall_IC_BU52033NVX>
Rev_1.1 0901_revive

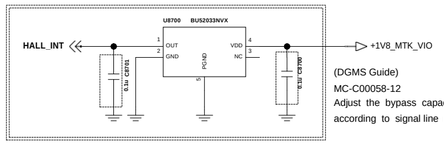

(DGMS Guide)
MC-C00058-12
Adjust the bypass capacitor value as necessary, according to signal line noise conditions

Rev_0.3
< 9-9-1-1_Motor >
9pi Motor

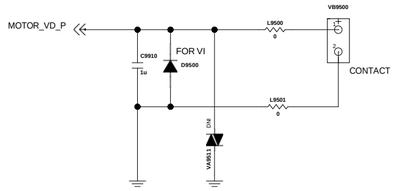

LG Electronics
MSM8926_X5_GLOBAL
A2 PDMNUMBER Rev
User Name Sensor 5 Drawing Date

<9-1-2_Battery_CNT_4P>

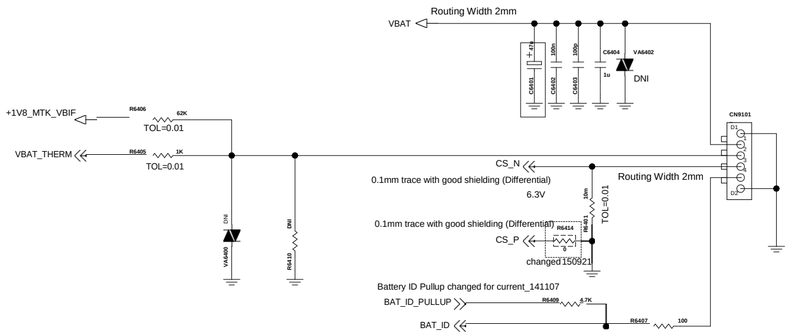

<4-7-1-1_Linear Charger_RT9536>

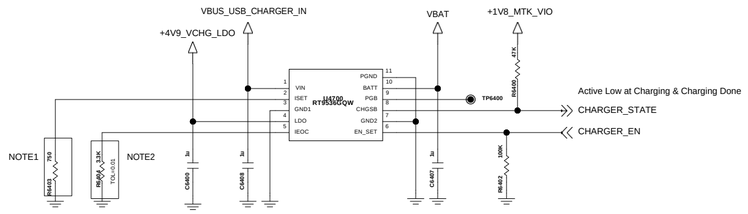

NOTE1
646mA (Need to change 1%)
ISET Setting
560 ohm : 910mA
620 ohm : 850mA
780 ohm : 680mA

820 ohm : 646mA

NOTE2
IEOC Setting
2K ohm 10% : 85mA
3.3K ohm 16.5% : 140.25mA

< 9-2-1_IO_USB2.0 >

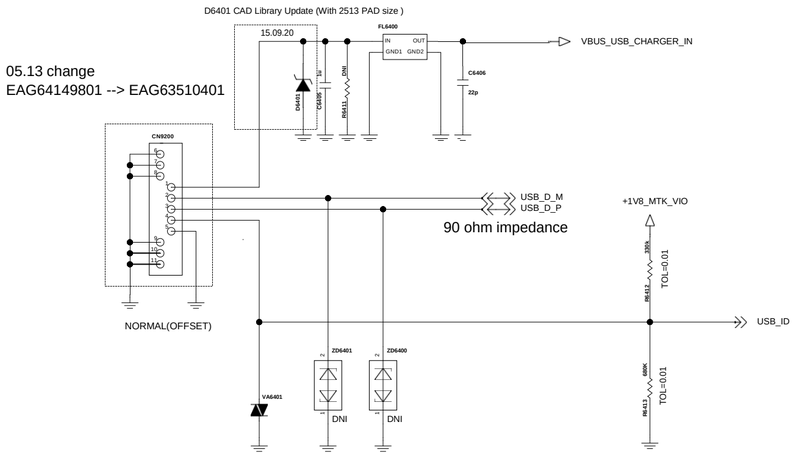

LG Electronics			
TITLE: MSM8926_B2_mini			
SIZE: A2	DWG NO: PDMNUMBER		REV: Rev
DRAWN BY: User Name	SHEET etc OF 19	Date: Drawing Date	

< 9-6_u_SDCARD_Socket > Rev_1.2

Circuit 1. u-SDCARD SIM Combo for QMC /w Low Detection

Note 1. +2V95_SD_PULL_UP (1.8 or 2.95V) switches automatically per inserted SD Card version
For example, SD card Version 2.0 = 2.95V, Version 3.0 = 1.8V

Note 2. +2V95_SD_VCC is SD/MMC Power

Caution ! - According to MSM8960, APQ8064 BackPowering issue, +2V95_SD_PULL_UP was Always on during sleep mode.
However, It is possible for MSM8974, MSM8x10 .. to be turned off, so, FET circuit to turn off it is not needed any more.

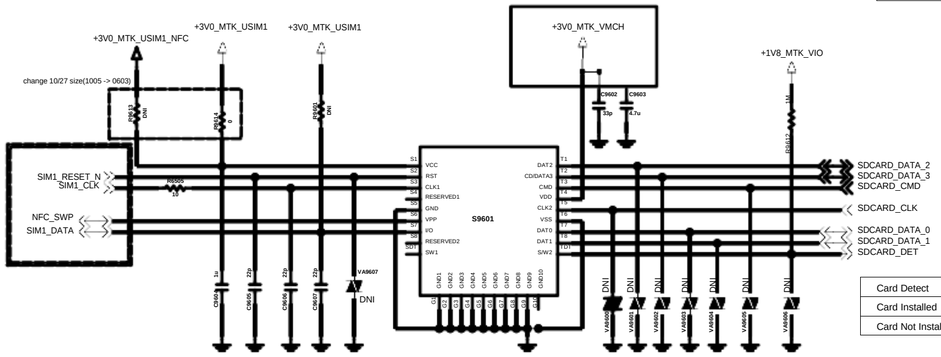

Card Detect	SW VSS(T6)	SD_CARD_DET
Card Installed		GND
Card Not Installed		1.8V

(DGMS Guide)
MC-C04581-13 : Below items should be satisfied
1. SIM_DATA pull-up resistor
2. Use under 33pF (Cap_Varistor) on each signal line
3. When routing, SIM_DATA, SIM_CLK should be seperated
4. CAP,Varistor should Place close to connector

(DGMS Guide)
MC-C04582-14 : Below items should be satisfied
1. SD_DETECT Pull-up or Pull-down
2. Data/CMD line should be needed Pull-up resistor
(If chipset has internal Pull-up, comment it on circuit)
3. Use under total 10pF Capacitance on each line ; Data [0:3], CMD - Cap. TVS diode, varistor
(on other line, We recommend 10pF capacitance and use under 30pF capacitance)
4. CAP,Varistor should Place close to connector

(DGMS Guide)
MC-C05446-7 : Below items should be satisfied
1. Power of SD card should use independant Power source just like LDO/PMIC which can turn off it.
2. Per chip type which support SD card should manage current capacity.
(In case of High speed mode, SD Card Power should get margin of 200mA)
3. Do not connect serial component to SD card power, voltage drop can arise at Power line.

Nano SIM(EAG64650901)

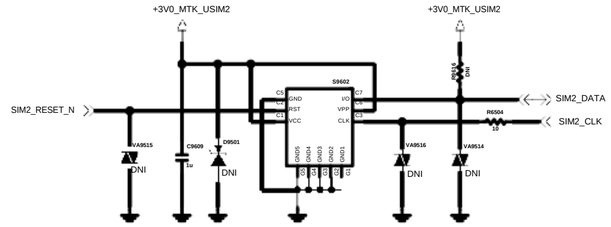

BACK KEY CONNECTOR

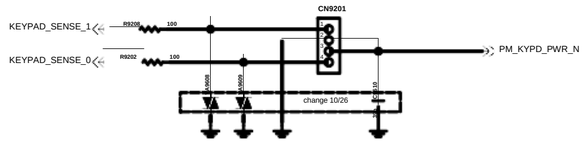

<TOP SHIELD CAN CLIP>

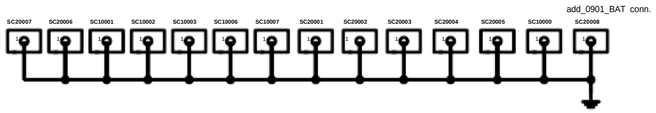

<BOT SHIELD CAN >

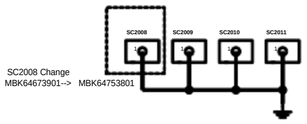

<2015/07/31>

PID 6x6

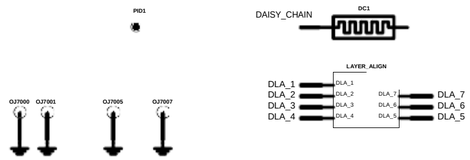

LG Electronics
MSM8926_B2_mini
A2 PDM NUMBER Rev
etc 19
User Name
Drawing Date

U2100_MT6732_IC,Digital Baseband Processor(Top View)	U3300_KMQ72000SMB-316,IC,MCP.eMMC4905(Top View)
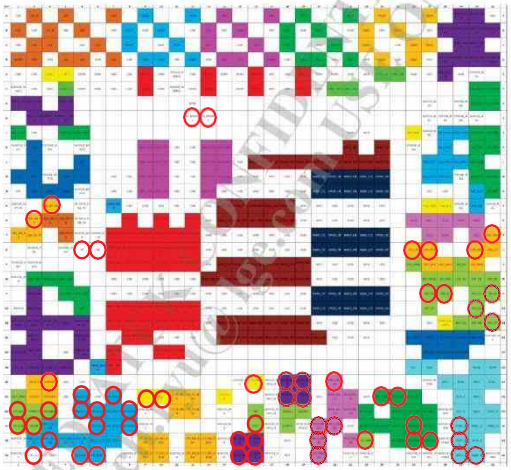 O Not used	O Not used
U4100_MT6325_IC,PMIC (Top View)	U4200_MT6311_IC,2nd PMIC (Top View)
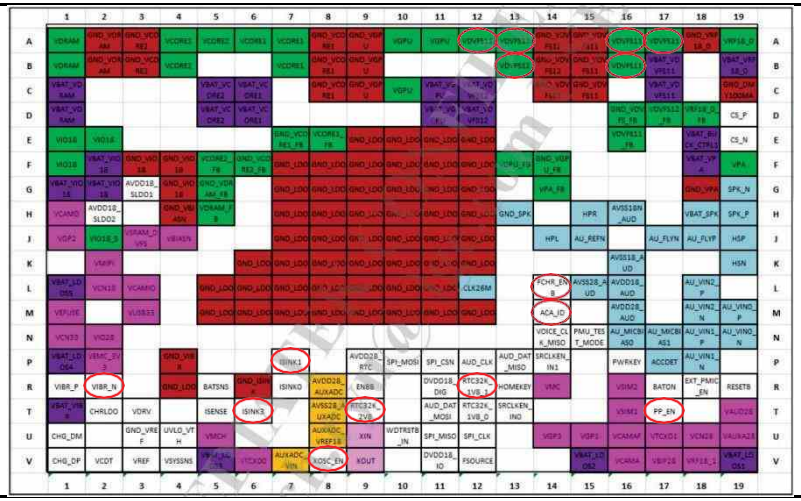 O Not used	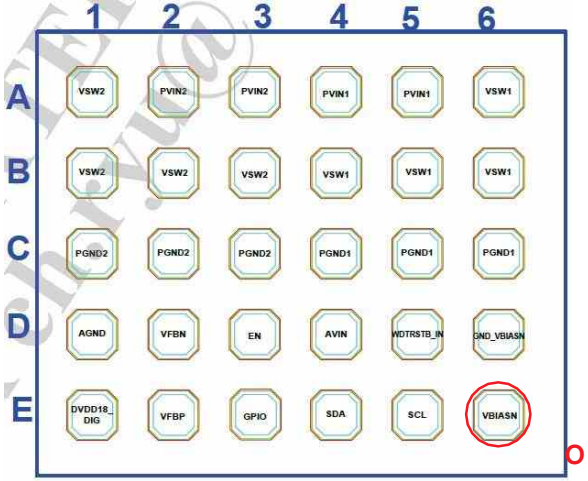 O Not used

Copyright © 2016 LG Electronics. Inc. All right reserved. Only training and service purposes